ULTRASONIC WATER METER · AUTOMATIC SHUTOFF VALVE

All-in-One *Meter & Valve.*

An inline ultrasonic water meter and motorized shutoff valve in a single body. It measures flow with no moving parts in the water path, watches for leaks and runaway usage against limits you set, and closes the line automatically when a limit is crossed. Water temperature, usage history, and valve control are in the SafeHous app. Pairs directly with SafeHous leak sensors for shutoff without internet in the path.

MODEL
SHA-1000

FORM FACTOR
Inline, threaded couplings

WIRELESS
LoRa, sub-GHz

SIZES
DN15 – DN50 (½" – 2")

§ 1.1

— KEY FEATURES

Ultrasonic Metering
Bidirectional flow measurement, no impeller. Reads in gallons or liters with daily and monthly totals.

Automatic Shutoff
Integrated motorized valve closes on any alert. App, timer, and schedule control; manual hex override.

Leak Detection
User-set leak threshold, single-session volume limit, and run-time limit. Always on or on a schedule.

Control-D2D Pairing
Device-to-device link with SafeHous leak sensors. Works without internet, Wi-Fi, or hub. Up to 128 pairings.

Sealed Lithium Battery
3.6 V, 19,000 mAh, field replaceable. ≤ 120 µA standby. Low-battery alert in app and on device.

232 PSI	IP67	½–2 IN	128
PRESSURE RATING	RATING	PIPE SIZES	D2D PAIRINGS

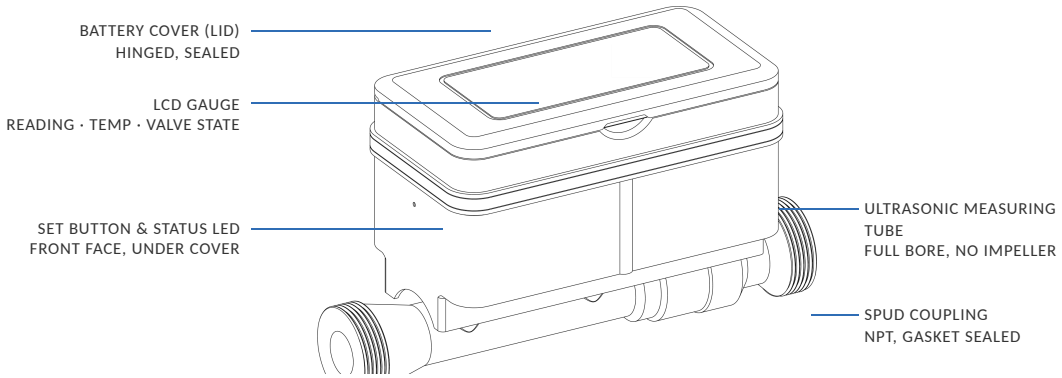

FIG. 01 · **SHA-1000** — ISOMETRIC VIEW, DN20 SHOWN

196 MM —— 7.72 IN

© 2026 SAFEHOUS · DS-SHA1000 · REV 26.09

02 · TECHNICAL REFERENCE

Full *Specifications.*

Mechanical, electrical, and environmental parameters. Values are manufacturer ratings under nominal operating conditions.

— MECHANICAL & ELECTRICAL § 2.1

METER TYPE **Ultrasonic, inline** Bidirectional flow indication · U5 / D3	POWER **3.6 V DC lithium · 19,000 mAh** Non-rechargeable, field replaceable
VALVE **Motorized ball valve** Manual hex-key override under rubber pads	CURRENT DRAW **≤ 120 µA standby** ≤ 170 mA operating
PRESSURE RATING **232 psi (1.6 MPa)** Pressure loss class Δp63	OPERATING TEMP **32 °F to 131 °F** 0 °C to 55 °C
WATER TEMP ALERT **High / low range** User adjustable in app	OPERATING HUMIDITY **≤ 90% RH** Non-condensing
CONNECTIONS **Spud couplings, NPT** Gasket sealed; female NPT fittings not included	MOUNTING **Inline, display up** Horizontal, or vertical with upward flow

— PERFORMANCE REFERENCE § 2.2

PARAMETER	VALUE	NOTES
Wireless protocol	LoRa · long-range	SafeHous hub required
Pairing method	Control-D2D	No internet required
Leak threshold	User set	Always, off, or scheduled
Session limits	Volume and duration	Auto shutoff optional
On-device schedules	6 valve · 6 leak	Run without internet
Timer	One-shot open/close	Runs on device
Empty-pipe detection	Yes	Alert on display
IP rating	IP67	

Connectivity § 2.3

- LoRa wireless radio — SUB-GHZ
- Control-D2D pairing — LOCAL MESH
- SafeHous App — IOS · ANDROID
- SafeHous Hub — REQUIRED

Compliance § 2.4

FCC PART 15 CLASS B **IC** RSS LICENCE-EXEMPT

- Full pipe required — ULTRASONIC
- Check valve upstream — RECOMMENDED
- Replaceable battery — USER-SERV
- Warranty — 1 YEAR LIMITED

Dimensions § 2.5

SIZE	THREAD	LENGTH	HEIGHT	WIDTH
DN15	1 NPT	196 mm	166 mm	90 mm
DN20	1 NPT	196 mm	166 mm	90 mm
DN25	1¼ NPT	225 mm	166 mm	92 mm
DN32	1½ NPT	230 mm	198 mm	103 mm
DN40	2 NPT	240 mm	198 mm	103 mm
DN50	2½ NPT	245 mm	198 mm	113 mm

Length is coupling face to coupling face. 196 mm = 7.72 in; 245 mm = 9.65 in.

— WHAT'S INCLUDED § 2.6

01
All-in-One Meter & Valve
SHA-1000 main unit, battery installed

02
Coupling Kit
2 × spud coupling, 2 × gasket, 2 × nut

03
Quick Start Guide
Printed user manual

© 2026 SAFEHOUS · DS-SHA1000 · REV 26.09